BV5503

Class 150 Flanged Stainless Steel Ball Valve.

- Stainless Steel Ball Valve
- 1/4" to 4" (DN15-DN100)
- Body ASTM A351 CF8M
- Seat Options TFM 1600/4215 Seat
- Flanged ASME 150
- Direct Mount with Lockable Lever
- Fire Safe Design API607 5th Edition
- Anti-Static Device
- Fully Maintainable

Description

The VOLT 2 Piece 2/2 way full bore ball valve is used to isolate process pipelines. The valve is a well proven ball valve designed to industry Standards. It comprises of an investment cast body in ASTM A351 CF8M stainless steel with options of both TFM 1600 or 4215 sealing. The valve finds wide use in fluid media while offering higher cycle life with reduced torque. The self-adjusting packing gland consists of dual sealing with an alignment collar for superior tightness. The valve is ideally suited for open/ closed operation and Isolation, both manually or actuated vis an ISO 5211 mounting plate Maintenance,of this valve allows the removal the of all seals with just four bolts.
The Valve offers the Kv and pressure drop similar to that of an open line. An antistatic device is fitted and the valve is fire safe designed to API 607 5th Edition.

Design Advantages

An economical ball valve that offers high performance that's is usually associated with much more expensive valves.

Blow - out proof stem

Prevents stem blowing out for maximum safety.

Easy in line maintenance

ATEX Approved

Repair Kits Readily Available

Description

This valve is the most popular valve in our flanged range, offering reliability and cost effectiveness. ASME150 flanged full bore, CF8M stainless steel body with ISO Top works. Lockable lever operated and a choice of TFM seats. Sizes range from ½" up to 4".

Beschreibung

Dieses Ventil ist das beliebteste Ventil in unserem Flanschsortiment und bietet Zuverlässigkeit und Wirtschaftlichkeit. ASME150-Flansch mit vollem Durchgang, CF8M-Edelstahlgehäuse mit ISO-Top-Funktion. Abschließbare Hebelbedienung und eine Auswahl an TFM-Sitzen. Die Größen reichen von ½" bis 4".

Descripción

Esta válvula es la más popular de nuestra gama de bridas, y ofrece fiabilidad y rentabilidad. Cuerpo de acero inoxidable CF8M con bridas de paso total ASME150 con ISO Top funciona. Palanca bloqueable operada y una selección de asientos TFM. Los tamaños van desde ½ "hasta 4".

Description

Cette vanne est la vanne la plus populaire de notre gamme à brides, offrant fiabilité et rentabilité. ASME150 à passage intégral à bride, corps en acier inoxydable CF8M avec ISO Top fonctionne. Levier verrouillable actionné et un choix de sièges TFM. Les tailles vont de ½" à 4".

All information is sourced from our manufacturer's data and is intended for guidance only - Valves Online can accept no liability for changes, omissions or errors.

BV5503

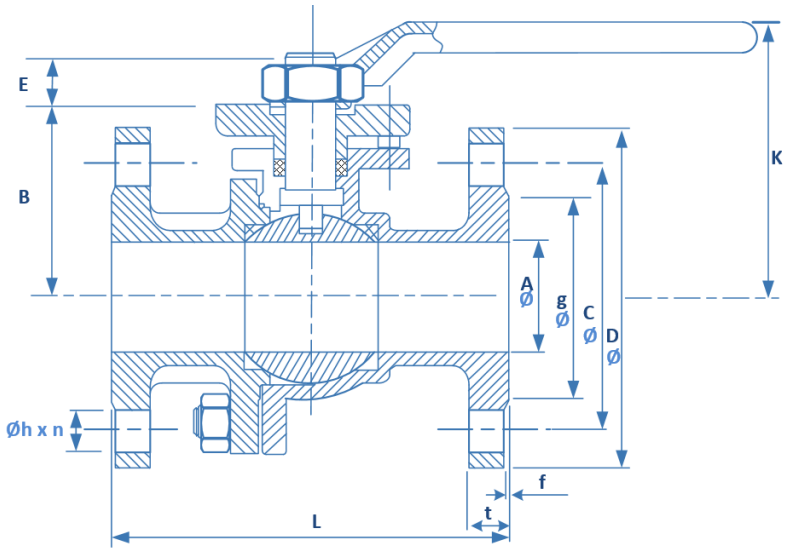

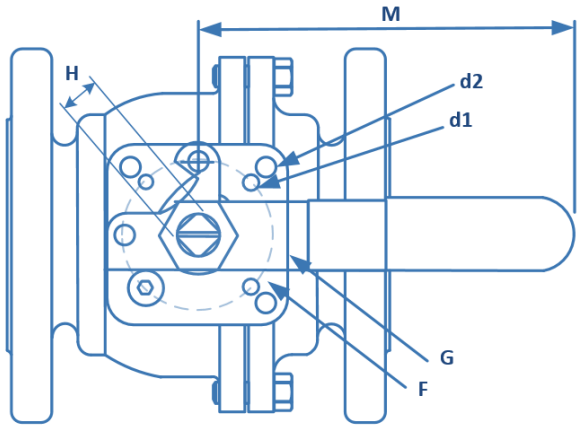

Dimensions ANSI 150 (mm)											
Size	A	B	E	L	H	K	M	F	G	d1	d2
1/2"	15	48	11	108	9	80	130	36	42	6	6
3/4"	20	53	11	117	9	80	130	36	42	6	6
1"	25	59	14	127	11	90	165	42	50	6	7
11/4"	32	71	14	140	11	102	165	42	50	6	7
11/2"	38	76	18	165	14	110	205	50	70	7	9.2
2"	50	85	18	178	14	120	205	50	70	7	9.2
21/2"	65	93.5	23	190	17	140	300	70	102	9.2	11.4
3"	80	103	23	203	17	150	340	70	102	9.2	11.4
4"	100	132	25	229	22	180	420	102	125	11.4	13.5

Flange Dimensions ANSI 150 (mm)								
Size	D	C	h	N	t	g	f	Wt (Kg)
1/2"	89	60.5	16	4	11.5	35	1.6	1.73
3/4"	98	70	16	4	11.5	43	1.6	2.13
1"	108	79.5	16	4	11.5	51	1.6	2.92
11/4"	117	89	16	4	12.7	64	1.6	4.02
11/2"	127	98.5	16	4	14.3	73	1.6	5.9
2"	152	121	19	4	15.9	92	1.6	8.72
21/2"	178	140	19	4	17.8	105	1.6	13.33
3"	190	153	19	4	19.1	127	1.6	17.03
4"	229	191	19	8	24	157	1.6	28.98

Carbon Steel Versions in ASME 150 and PN16

All information is sourced from our manufacturer's data and is intended for guidance only - Valves Online can accept no liability for changes, omissions or errors.

BV5503

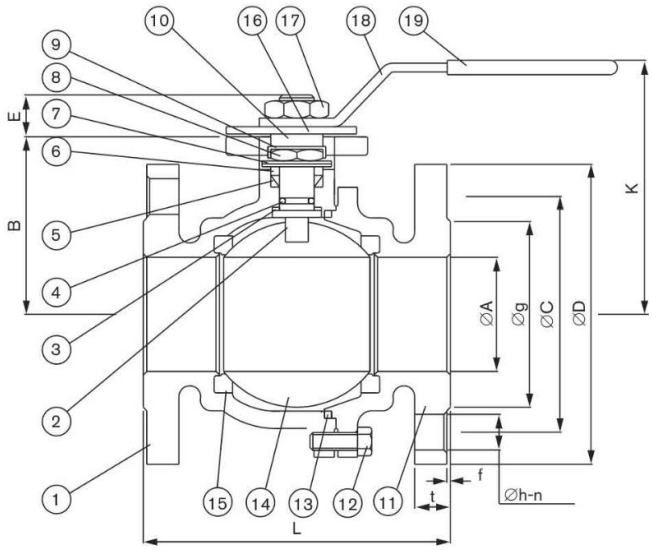

Material List		
NO.	Parts	Materials
1	Body	CF8M
2	Stem	CF8M
3	Thrust washer	RPTFE
4	O Ring	PTFE
5	Stem packing	PTFE
6	Gland	SUS304
7	Disc Wasker	SUS301
8	Stem Nut	SUS304
9	Nut Stop	SUS304
10	Washer	SUS304
11	Flanged End	CF8M/WCB
12	Bolt	SUS304
13	Gasket	PTFE
14	Ball	SUS316
15	Ball seat	TFM 1600/4215
16	Stopper Plate	SUS304
17	Handle Nut	SUS304
18	Handle	SUS304
19	Sleeve	PLASTIC
20	Stop Pin	SUS304
21	Set Bolt	SUS304
22	Lever Head	CF8M
23	Pipe Handle	STEEL PIPE

Technical Data	ANSI 150
Valve Size	1/2"-4" (DN15-DN100)
Design	ASME B16.34
Body material	ASTM A351 CF8M
Ball seal material	TFM 1600/4215
Face to Face	ASME B16.10
Flange Connection	ASME B16.50
Pressure Rating	275PSI
Mounting	ISO 5211 Direct Mount
Seat	PTFE

Pressure - Temperature Limits

SIZE 1/4" - 2"

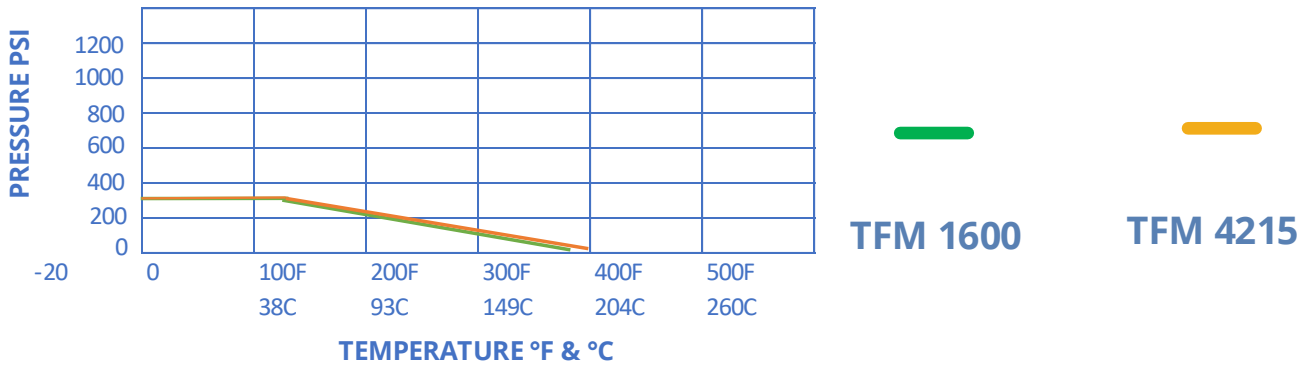

All information is sourced from our manufacturer's data and is intended for guidance only - Valves Online can accept no liability for changes, omissions or errors.